C3Plus Manual / 说明书

Specification/产品规格

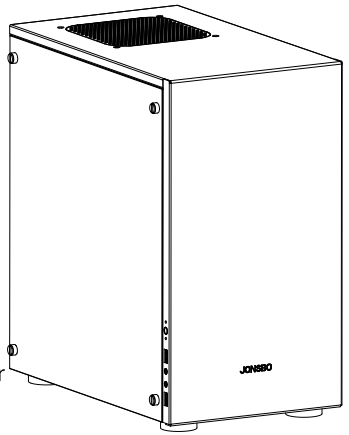

Model/型号: C3 Plus **Size/尺寸:** 218mm(W)*360mm(D)*398(H)
Material/材质: 前板/Front Plate:1.5mm 铝/Aluminum
内部结构/Internal Structure:0.8mm结构钢/SGCC Steel
HDD Support/硬盘支持: 4*3.5HDD", 1*SSD" Or/或者3*3.5HDD", 3*SSD"
Expansion Slot/扩展槽: 4
PSU/电源: 250mm(if fan and HDD are installed on bottom, only 185 mm can be installed)/(如果底部装风扇和硬盘只能装185mm)
Motherboard/主板: ITX/Micro-ATX
Front I/O Port/前置接口: USB3.0*2/AUDIO*1/MIC*1
Compatibility: Height of CPU Cooler/CPU散热器高度: 170mm
/兼容设备 Length of display card/显卡长度: 340mm(340mm can be installed if front HDD rack bracket has been removed, or otherwise no longer than 280mm)/(前硬盘架拆了可以装340MM，如果不拆,装了3.5硬盘则不能超过280MM)
Cooling Systerm/散热系统: Top/顶部:1*140mm fan/风扇(standard/标配)
Back/背面:1*120mm fan/风扇(option/选配) Bottom/底部:1*120mm fan/风扇(option/选配)
Front/前面:2*120mm fan/风扇(option/选配) Or/或者 240 liquid CPU cooler/240水冷(option/选配)
Weight/重量: Net/净重 5.3kg

Accessories / 配件包说明

For locking SSD 2.5硬盘螺丝	12PCS	For locking Fan 风扇螺丝	13PCS
For locking HDD 3.5硬盘螺丝	16PCS	Standby locking for Aluminium side plate 铝侧板备用螺丝	2PCS
For locking PSU and motherboard 电源x4/主板x9	13PCS	HDD Rubber Gasket 硬盘胶垫	20PCS
Gasket 螺丝垫片（电源、主板）	13PCS	Hexagonal Stand-off 六角铜柱（固定主板）	1PCS
Bunch Wire Ties 将线材束整齐	4PCS		

Connectors / 连接说明

USB 3.0 Connection / 连接

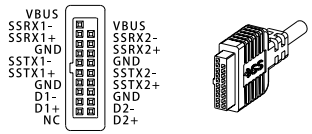

HD AUDIO Connection / 连接

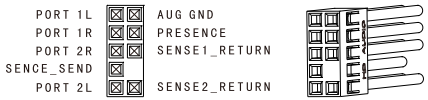

Hard drive LED Connection / 硬盘灯连接

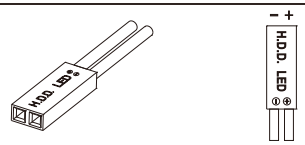

Power Button Connection / 电源开关连接

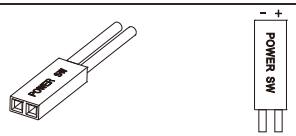

Power LED Connection / 电源灯连接

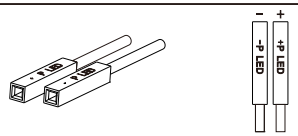

Schematic Diagram / 产品装机示意图

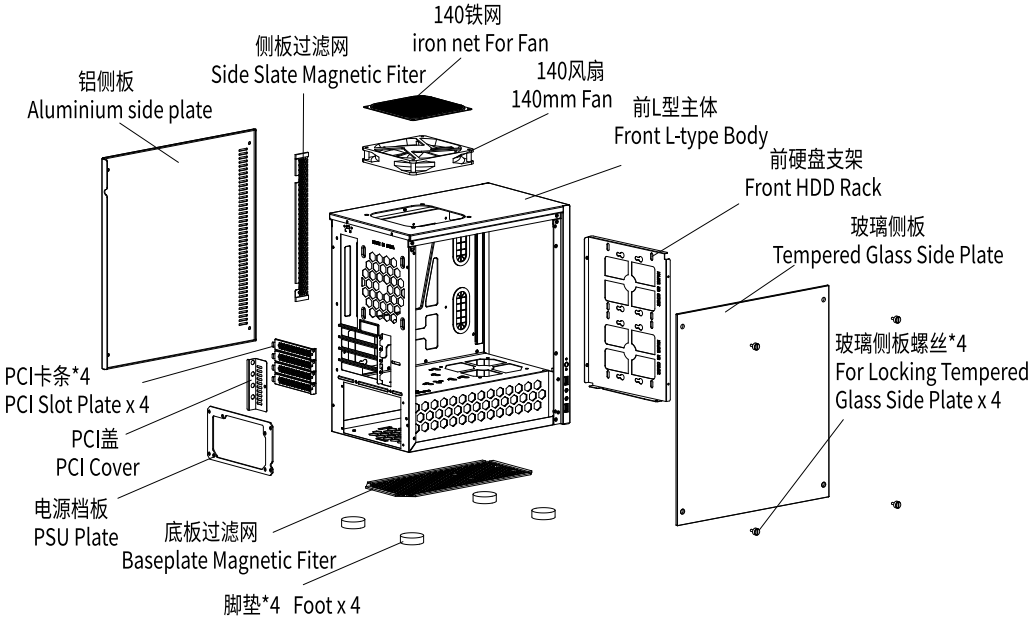

Installation Procedure For ITX Motherboard / ITX 主板推荐安装步骤

01

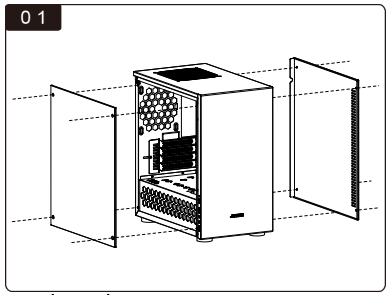

Lay down the case,
remove 8 screws and take out the side panels.
把机箱平放松开8颗螺丝取下侧板。

02

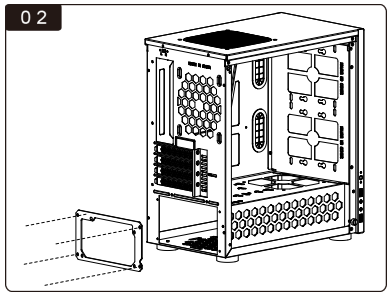

Remove 4 screws from PSU cage.
拧下电源固定架的4颗螺丝。

03

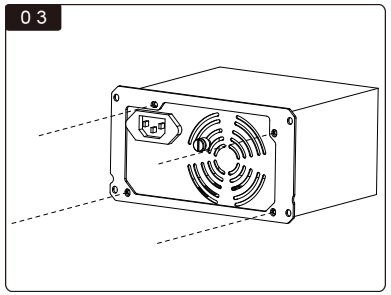

Lock the PSU onto the PSU cage.
把电源锁在电源固定架上。

04

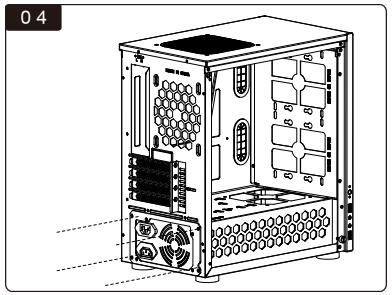

Install the PSU and lock with screws.
装入电源.锁上螺丝。

05

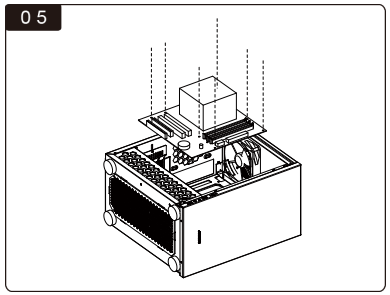

Install I/O plate and motherboard,
and then lock with screws.
装入I/0弹片，再装入主机板 用螺丝锁固。

06

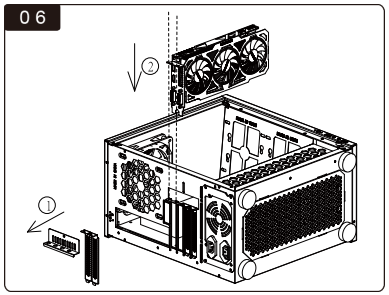

Remove PCI cover,
take out PCI slot plate and install video card.
松开PCI档板，取下PCI卡条，装上显卡。

07

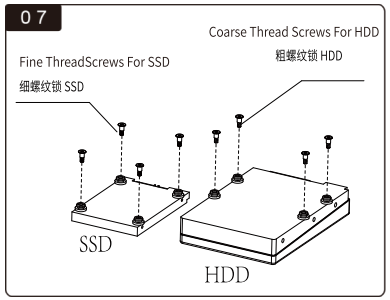

Install HDD anti-shock rubber.
装上硬盘防震胶垫。

08

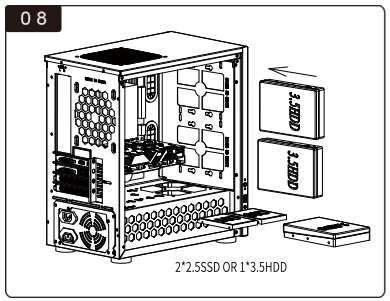

2 x 2.5 SSD or 1 x 3.5 HDD can be installed on the PSU cage.
2 x 3.5 HDD or 2 x 120 fans can be installed on front.
电源罩上可以装2个2.5SSD或1个3.5HDD。
前硬盘支架可以装2个3.5HDD或2个120风扇。

09

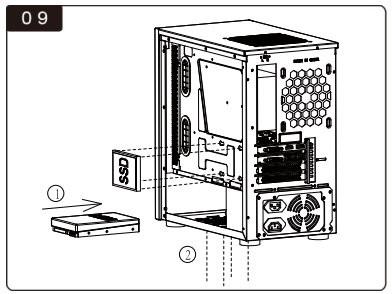

1 x 3.5 HDD can be installed on bottom.
1 x SSD can be installed at back of motherboard.
底部上可以装一个3.5HDD，主板背面可以装一个SSD。

10

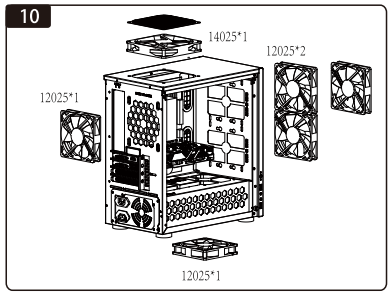

2 x 120 fans can be installed
if HDD is not installed in the front HDD cage.
前硬盘架上如果不装硬盘可以装2个120风扇。

11

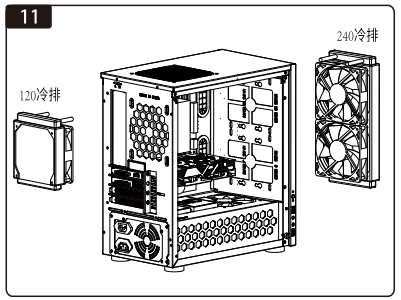

Mostly 1 set of 240 radiator can be installed on front,
and 1 set of 120 radiator can be installed at back.
最多可以前面装一组240冷排，后面装一组120冷排。

12

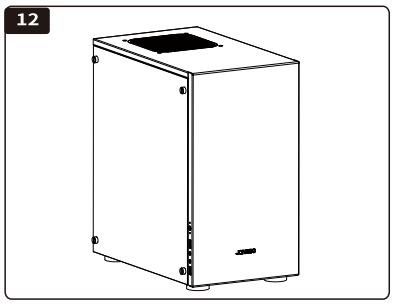

Connect all cables inside,
and then close the side panel, Okay.
把内部的线全部插上，最后盖上侧板OK。